MADE IN HOLLAND

C30e

100% ELECTRICAL PICK AND CARRY CRANE

HOEFLON

NEW! THE COMPACT EPOWER

We are extremely proud to be able to present a fully electrical (lithium) pick and carry crane. Hoeflon is ready for the future. The C30 is a high-level crane with easy operation. It is certain to prove itself in the industrial sector. The crane can be fully operated with the remote control, allowing the machine operator to focus on the hoisting job.

SPIDER CRANE **C30e**

The C30e is a crane with continuous outriggers adjustment option. Each levelling outrigger calculates its position in order to determine the hoisting capacity. Its low centre of gravity and extending crawler undercarriage make it highly suitable for manoeuvring on a slope. The machine is fitted with sloping crawler supports for a large ground clearance. The C30e has a compact jib making it especially short in length. The transport height remains two metres as the fly jib fits in the centre of the machine.

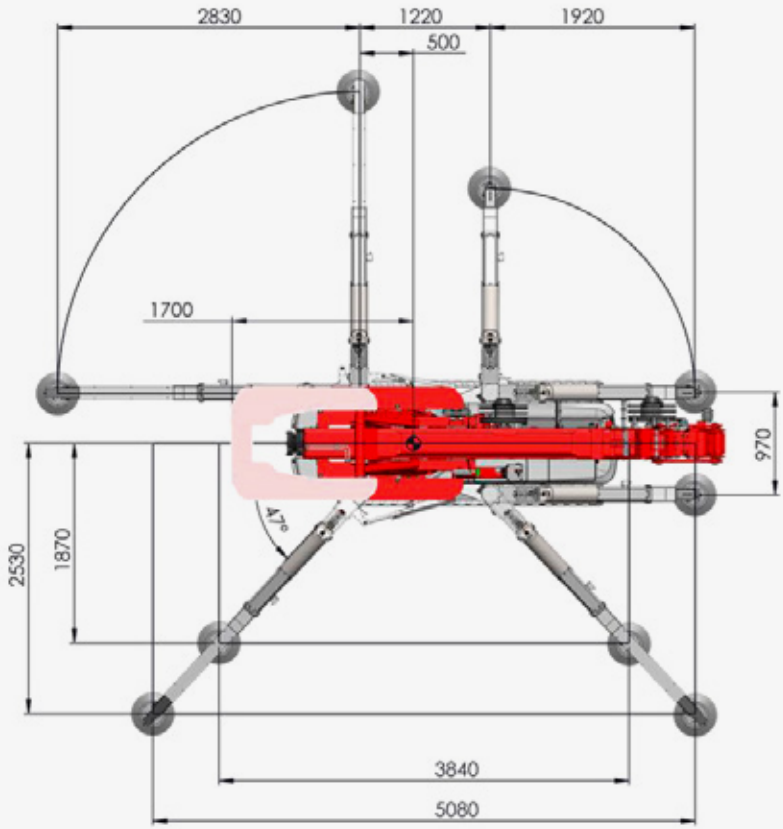

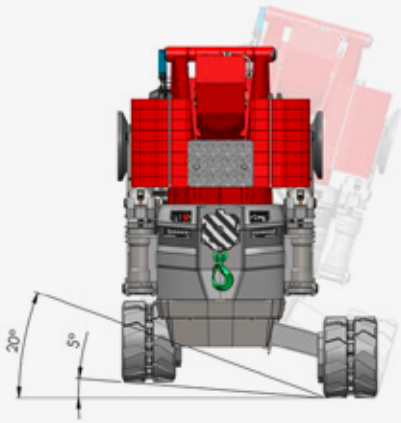

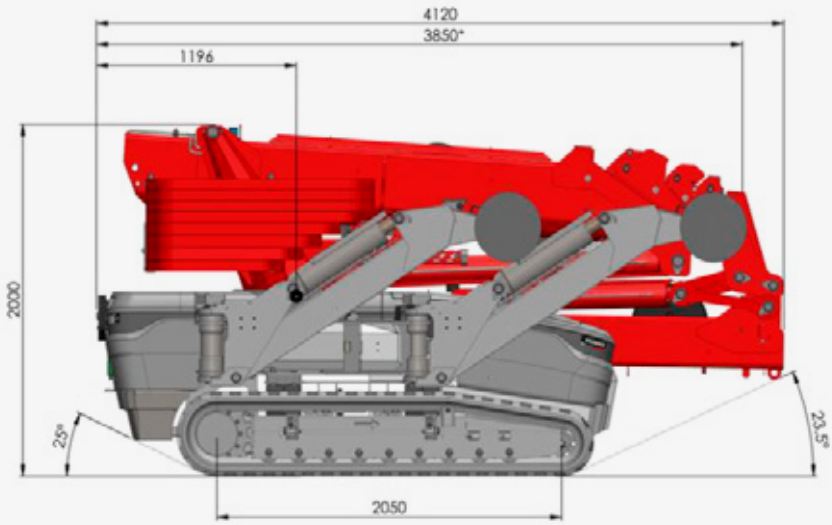

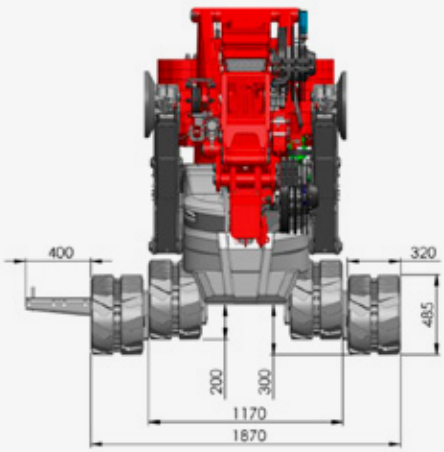

WELL EQUIPPED AS **STANDARD**

BASIC SPECIFICATIONS

Crane capacity	9000kg
Pick and carry capacity main boom	2000kg
Pick and carry capacity fly-jib	1000kg
Hoisting height	14,5m with fly-jib 22m
Transport dimensions	3,85m x 1,2m x 2m
Jib slewing range	12,2m with fly-jib 20m
Total weight	8700kg
Extendible and removable ballast	2350kg
Weight without ballast	6350kg (2350kg)
Weight without fly jib	7950kg (750kg)
Weight without ballast, without fly jib	5600kg (2350kg + 750kg)

PICK AND CARRY UNDERCARRIAGE

Travel speed	1st gear: 0.75 km/h 2nd gear: 1.5 km/h
Crawler	Non marking
Crawler adjustment (hydraulic)	700 mm, crawlers can be controlled separately
Inclination angle, forwards and reverse	20°
Transport stand ground pressure	0,76kg/cm2
Ground clearance	300mm

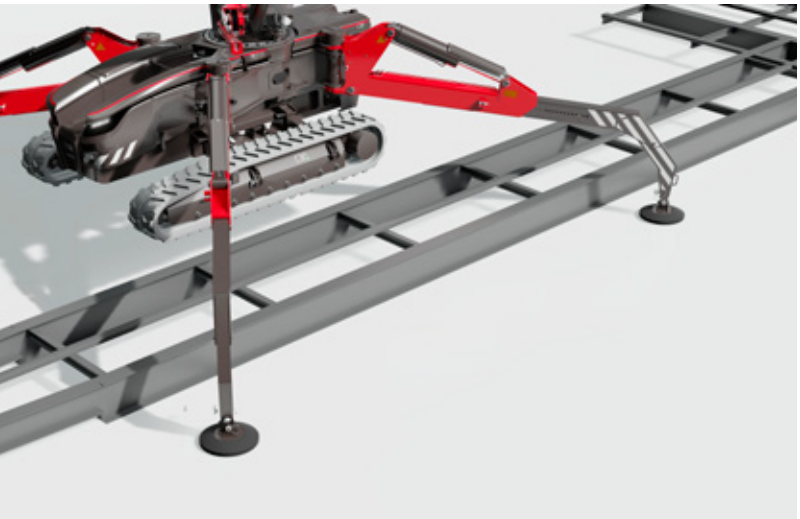

OUTRIGGERS

Levelling outriggers	Continuous adjustment
	Continuous hydraulic extension
	Articulated outriggers
	Automatic locking
Position measuring system	Redundant
Max. outriggers pressure	8900 kg

ELECTRICAL DRIVE SYSTEM

Battery charger	Lithium
	230 V mono phase
	400V 3 fase
Capacity	8 hours of hoisting at
	+/-60% power-on duration
Charging time	6 uur
Electric motor	12kW
Functional	Use and charge at the same time
Control	Energy-saving control

7X POWER BENEFITS IN A ROW

- OUTRIGGERS MONITORING
- EXTENDIBLE OUTRIGGERS
- REMOVABLE BALLAST
- FITS THROUGH A DOUBLE GATE
- LITHIUM CRANE
- TRAVEL WITH LOAD
- EASY OPERATION

OPERATION

Remote control	434 MHz
Range	250m
Battery	3.0" TFT LCD
Accu	Exchangeable
Portability	Hip or shoulder strap
Control	Accurate proportional control

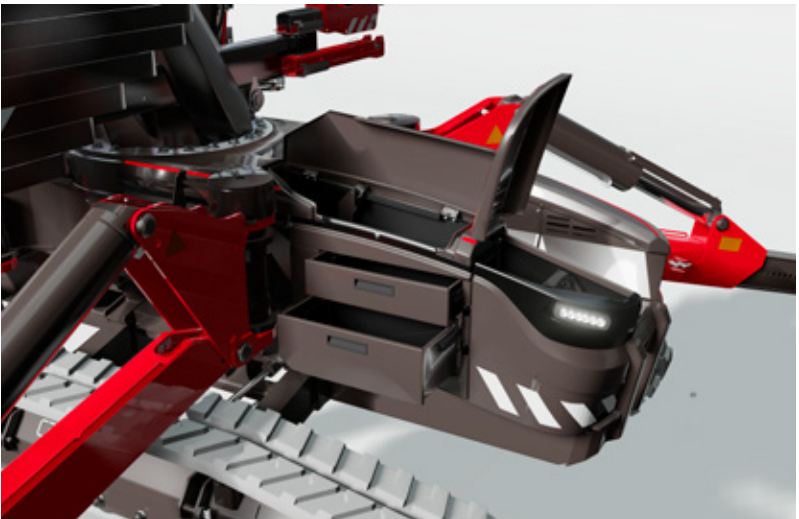

ACCESSOIRES

Drawer	2x sliding
Box 1	for remote control
Box 2	for hoisting equipment
Lighting	6x work lamps (LED)

Subject to technical amendments.

COMPLETE **TABLE**

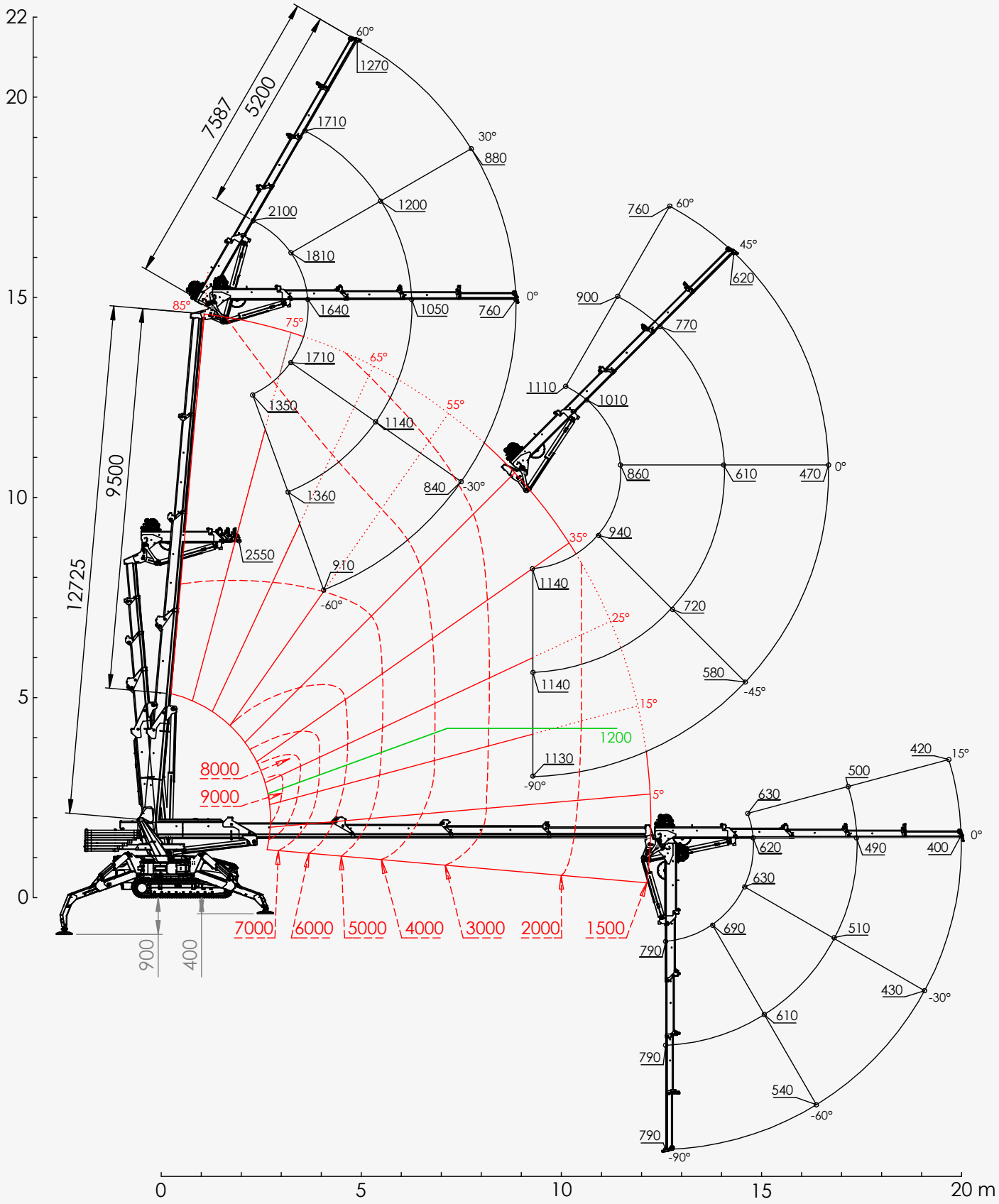

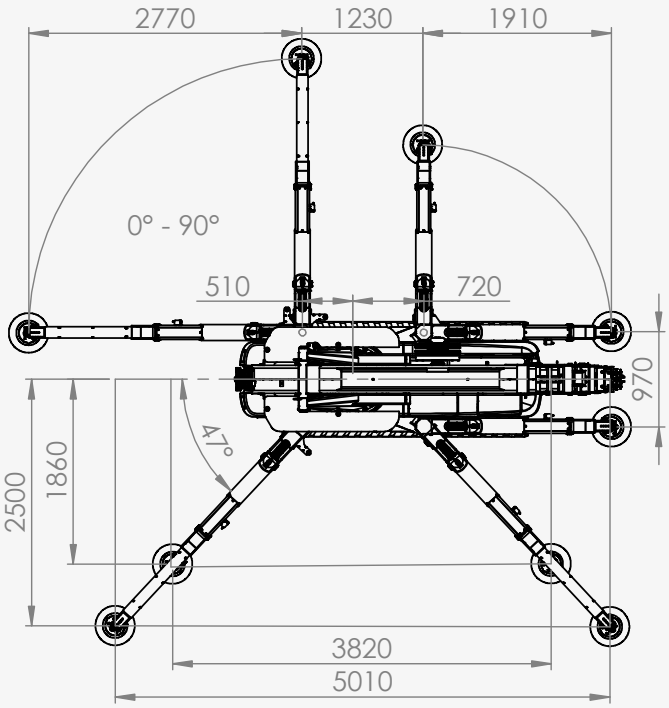

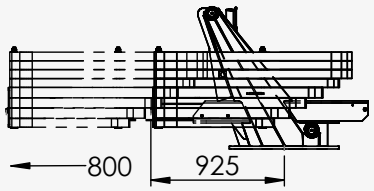

Maximum load, main boom	9000kg
Maximum angle, main boom (95° to a main boom of 6.5 m)	85°
Maximum load, hydraulic fly jib	3000kg
Maximum angle, hydraulic fly jib	60°
Weight, hydraulic fly jib	750kg
Load on stabiliser outriggers	8900kg
Ballast weight	2350kg
Wind load	6 Bft (40 km/h)
Machine weight, without fly jib	7950kg

CAPACITY, FLY JIB WITH EXTENDED BALLAST

C30e load diagram

Boom	Length	3,2 m			8,0 m			12,7 m		
Angle	Fly-jib	2,4 m	5,0 m	7,6 m	2,4 m	5,0 m	7,6 m	2,4 m	5,0 m	7,6 m
85°	60°	2400	1980	1270	2400	1980	1270	2100	1710	1270
	30°	2550	1880	1120	2550	1880	1120	1810	1200	880
	0°	2550	1440	920	2550	1440	920	1640	1050	760
	-30°	2500	1340	850	2500	1340	850	1710	1140	840
	-60°	1350	1360	910	1350	1360	910	1350	1360	910
60°	60°	2400	1980	1270	2400	1980	1270	1340	1060	880
	30°	3000	1930	1120	2760	1690	1120	1100	790	610
	0°	3000	1540	980	2460	1480	980	1010	710	530
	-45°	1700	1710	1160	1700	1710	1160	1110	840	660
	-90°	1140	1140	1130	1140	1140	1130	1140	1140	1130
45°	60°	2400	1980	1270	2400	1980	1270	1110	900	760
	45°	2770	2070	1140	2640	1760	1140	1010	770	620
	0°	3000	1580	1000	2120	1330	950	860	610	470
	-45°	1700	1710	1270	1700	1650	1230	940	720	580
	-90°	1140	1140	1130	1140	1140	1130	1140	1140	1130
20°	35°	3000	1970	1120	1900	1410	1050	750	610	510
	20°	3000	1760	1080	1790	1270	930	720	570	470
	0°	3000	1610	1030	1730	1200	870	700	550	450
	-45°	1700	1710	1380	1700	1460	1120	740	620	530
	-90°	1140	1140	1130	1140	1140	1130	900	900	900
0°	15°	3000	1610	1020	1670	1210	900	630	500	420
	0°	3000	1610	1030	1630	1180	870	620	490	400
	-30°	2500	1810	1170	1690	1260	960	630	510	430
	-60°	1350	1360	1380	1350	1360	1330	690	610	540
	-90°	1140	1140	1130	1140	1140	1130	790	790	790

COMPLETE **TABLE** WITHOUT BALLAST

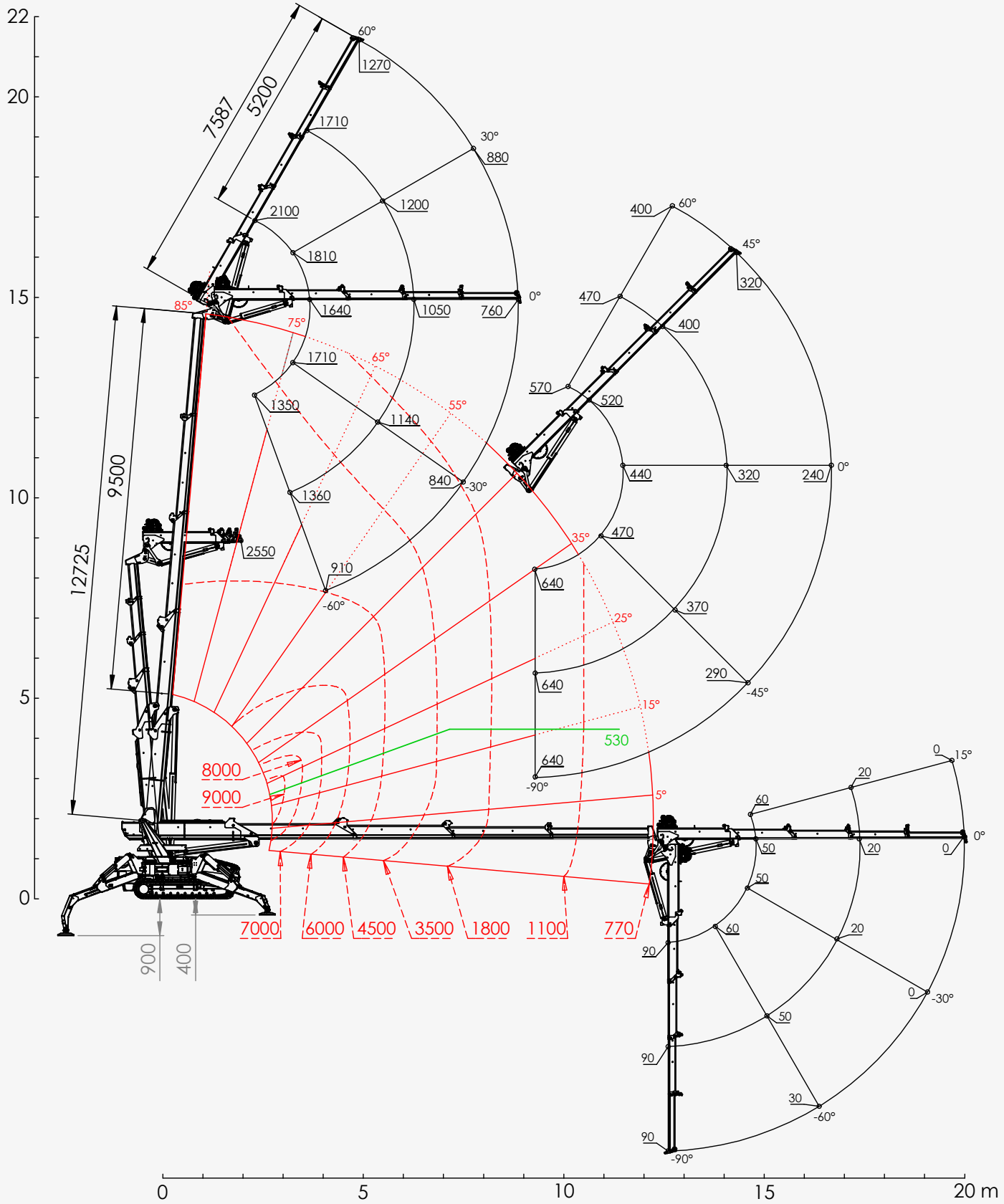

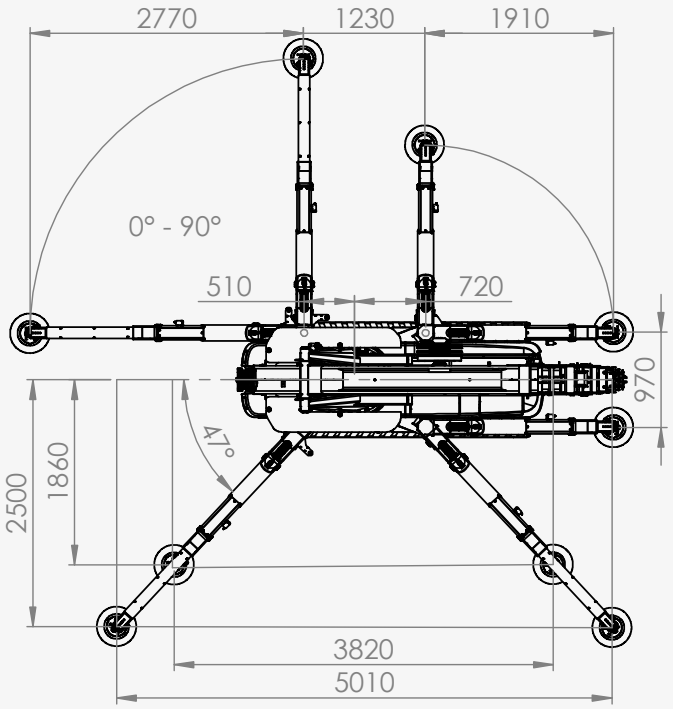

WITHOUT BALLAST

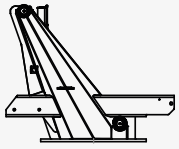

Maximum load, main boom	9000kg
Maximum angle, main boom (95° to a main boom length of 6.5 m)	85°
Maximum load, hydraulic fly jib	3000kg
Maximum angle, hydraulic fly jib	60°
Weight, hydraulic fly jib	750kg
Load on stabiliser outriggers	8900kg
Ballast weight	2350kg
Wind load	6 Bft (40 km/h)
Machine weight, without fly jib	7950kg
without ballast	5600kg

JIB CAPACITY WITHOUT BALLAST (KG)

C30e load diagram

Boom	Length	3,2 m			8,0 m			12,7 m		
Angle	Fly-jib	2,4 m	5,0 m	7,6 m	2,4 m	5,0 m	7,6 m	2,4 m	5,0 m	7,6 m
85°	60°	2400	1980	1270	2400	1980	1270	2100	1710	1270
	30°	2550	1880	1120	2550	1880	1120	1810	1200	880
	0°	2550	1440	920	2550	1440	920	1640	1050	760
	-30°	2500	1340	850	2500	1340	850	1710	1140	840
	-60°	1350	1360	910	1350	1360	910	1350	1360	910
60°	60°	2400	1980	1270	2400	1980	1270	1340	1060	870
	30°	3000	1930	1120	2510	1490	1040	1100	780	590
	0°	3000	1540	980	2220	1290	890	1010	690	510
	-45°	1700	1710	1160	1700	1650	1160	1110	830	650
	-90°	1140	1140	1130	1140	1140	1130	1140	1140	1130
45°	60°	2400	1980	1270	1810	1350	1070	570	470	400
	45°	2770	2070	1140	1580	1100	840	520	400	320
	0°	3000	1580	1000	1300	850	610	440	320	240
	-45°	1700	1710	1270	1460	1030	790	470	370	290
	-90°	1140	1140	1130	1140	1140	1130	640	640	640
20°	35°	3000	1970	1120	860	620	480	120	90	50
	20°	3000	1760	1080	800	560	430	110	70	30
	0°	3000	1610	1030	770	530	400	100	60	20
	-45°	1700	1710	1380	840	630	500	110	80	50
	-90°	1140	1140	1130	1140	1140	1130	160	160	160
0°	15°	3000	1610	1020	720	510	380	60	20	0
	0°	3000	1610	1030	700	490	370	50	20	0
	-30°	2500	1810	1170	720	520	400	50	20	0
	-60°	1350	1360	1380	840	670	560	60	50	30
	-90°	1140	1140	1130	1070	1070	1070	90	90	90

OPTIONS FOR GREATER WORK SATISFACTION

Capacity, fly jib	3000kg
Capacity, winch on fly-jib	1000kg, 2000kg en 3000kg
Additional battery	+ 16.5% capacity
Portal connection	+ 16.5% capacity
Possible accessories	Manipulator

The ballast will be extended to enable travel with a load

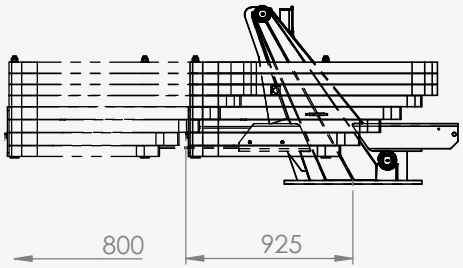

Maximum load	1000 kg
Maximum angle	60°
Extension, main boom	1000 mm
Extension, fly-jib	1000 mm

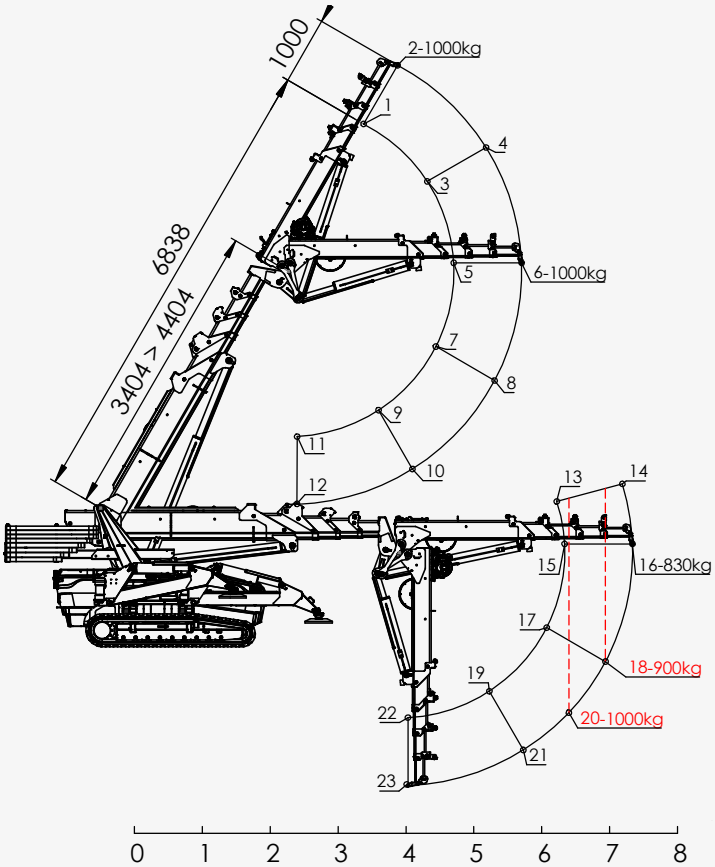

CAPACITY, JIB (KG)

Position	Front	Side	Rear
1	1000	1000	300
2	1000	1000	250
3	1000	860	190
4	1000	680	140
5	1000	740	150
6	1000	580	110
7	1000	790	150
8	1000	630	110
9	1000	1000	210
10	1000	880	170
11	1000	1000	410
12	1000	1000	410
13	1000	320	0
14	860	260	0
15	1000	310	0
16	830	250	0
17	1000	320	0
18	900	270	0
19	1000	400	0
20	1000	300	0
21	1000	350	0
22	1000	590	0
23	1000	590	0

Winch on fly jib

Hoeflink Portal

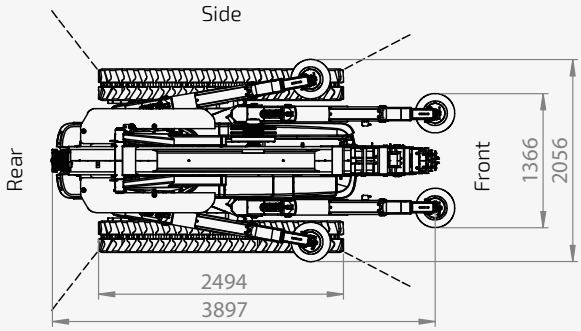

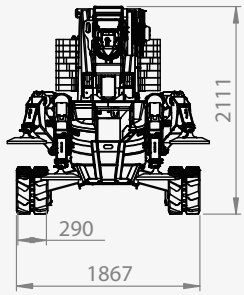

The crawler undercarriage will be fully extended to activate travel with a load

Maximum capacity	2000 kg
Maximum angle	60°
Extension, main boom	2000 mm

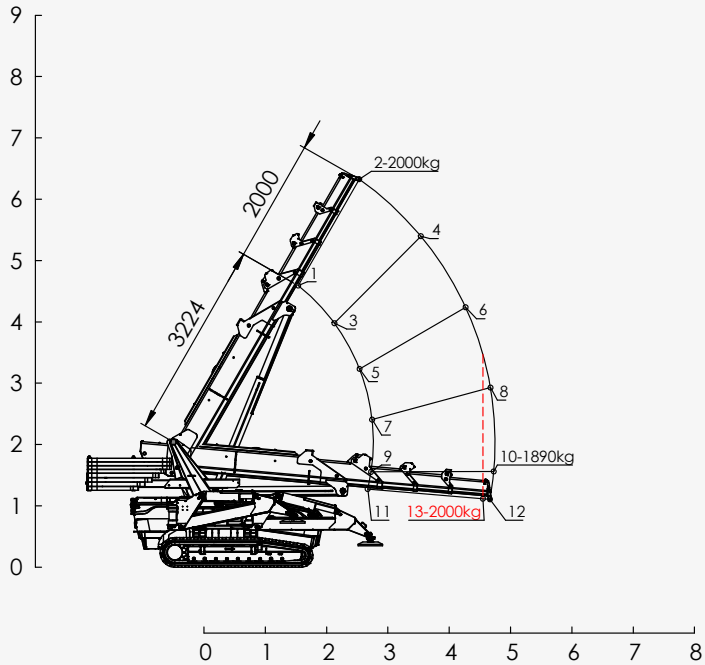

CAPACITY, MAIN BOOM (KG)

Position	Front	Side	Rear
1	2000	2000	1710
2	2000	2000	810
3	2000	2000	1020
4	2000	1310	460
5	2000	2000	770
6	2000	970	320
7	2000	1890	670
8	1930	830	270
9	2000	1880	670
10	1890	820	260
11	2000	1940	690
12	1930	830	270
13	2000	860	280

C30e

STANDARD PICK AND CARRY

HOEFLON FLY JIB

The fly jib with hydraulic adjustment has a length of seven metres and a hoisting capacity of three tonnes.

The fly jib can be optionally equipped with a winch with a capacity of three tonnes.

The fly jib folds under the main boom in transport mode.

YOUR POINT OF CONTACT

Hoeflon distributes its machinery through a global network of dealers. Your local sales and service partner will be happy to help you.

Your Hoeflon contact

HOEFLON

Zwolleweg 2, 3771 NR, Barneveld The Netherlands | Tel: +31(0)342400288 | sales@hoeflon.com | **hoeflon.com**